SUPERMARKET FOODSERVICE

PSSC-H

Prep & Display Case (High Series)

Applications: DELI, BAKERY, MEALS

UPDATED DECEMBER 2007

Standard Features

Remote Refrigeration System
Off Cycle Defrost
CFC Free Foamed-In-Place Insulation
Seamless, Non-Corrosive Tub
Copper Tube Aluminum Finned Coils
Solar Digital Thermometer
Welded Steel Chassis
Leveler Legs (NSF 6")
~~Black Interior/Exterior~~
~~Black Poly Ledges (Top, Rear)~~
XTR Nosepiece ~~Black or~~ Satin Silver
Canopy Light
(1) Row of Adjustable (Height & Angle) Shelves
15" Black
Undershelf Lighting

PSSC-H (w/Ingredient Pans)

Options

Self-Contained Refrigeration System
Electric Condensate Dissipator Pan
Electronic Thermostat Temperature Controls
Electronic Temperature Sensors
EPR Valve
Liquid Line Hand Valve
Energy Efficient Fans
Suction Line Solenoid
20 Amp Duplex Outlet
ISO Receptacle
Stainless Interior Finish
1" or 3" Bumper Mold - Specify Color & Location
Custom Finish Base - Specify Laminate, Veneer, Paint or Stainless
Custom Nosepiece Finish - Specify Paint or Veneer
Custom Rear Ledges- Specify Black Poly, Solid Surface, Laminate or Stainless
Endpanels - Specify Black, Stainless Surface or Laminate
Sloped Deck Insert - 2' Sections - Specify Black or Stainless
Casters (NSF)
Ledge Light

PSSC-H (w/Bread Display)

Specify Condiment Layout & Pan Sizes

TECHNICAL DATA
BTU's / Linear Ft. 700
Off Cycle Defrost
Evap Temperature 18F
Voltage 120v-1-60z

	4'	6'	8'	12'
Total Amps (Remote)	2	2	3	5
Total Amps (Self-Contained)*	20.5	20.5	20.5	24

*Total Amps Include Electric Dissipator Pans
Cases Equipped with Dissipator Pans have a NEMA L5-30 Plug
Cases without Dissipator Pans have a NEMA L5-20 Plug

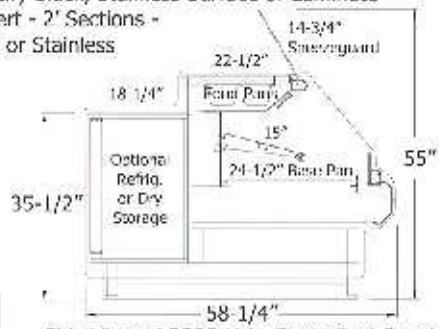

Side View of PSSC-H (w/Ingredient Pans)

Plan View
4', 6', 8' or 12'

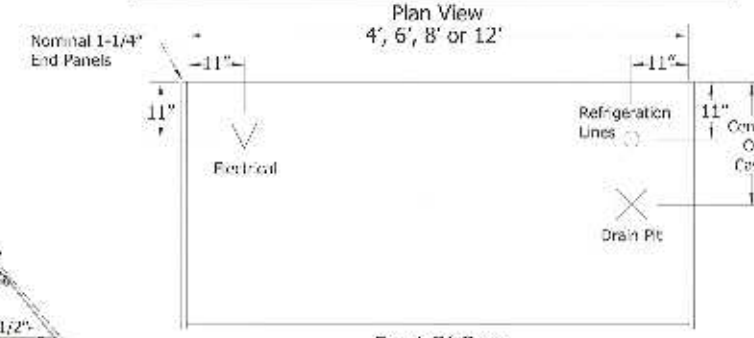

Front Of Case

White Corian top and rear ledges

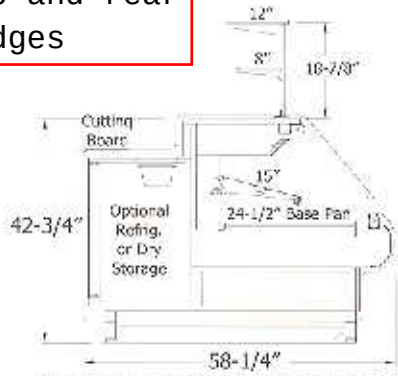

Side View of PSSC-H (w/Bread Display)

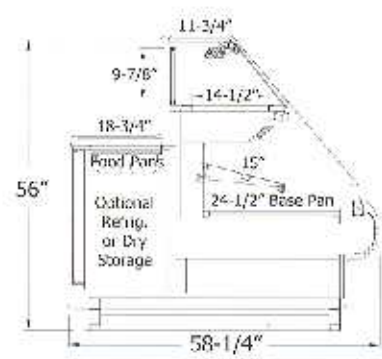

Side View of PSSC-H (Service Dome)

Exterior color to match Hussmann #311 Pearl
Interior color Stainless Steel

9900662 CONFORMS TO NSF STD 7

Southern STORE FIXTURES, INC.
1-800-552-6283

Note: The products represented here were designed for use in environments where temperature and humidity do not exceed 75°F and 55% R.H. respectively. We reserve the right to change or revise specifications or design in connection with any feature of our products. Such changes do not entitle the buyer to corresponding changes, improvements, additions, or replacement of equipment previously sold or shipped.

© 2002, Southern Store Fixtures, Inc.